GUIDELINES ON BEST AVAILABLE TECHNIQUES AND PROVISIONAL GUIDANCE ON BEST ENVIRONMENTAL PRACTICES

relevant to Article 5 and Annex C of the Stockholm Convention on Persistent Organic Pollutants

Destruction of animal carcasses

UNEP

Stockholm Convention

This publication may be reproduced in whole or in part in any form for educational or non-profit purposes without special permission, provided acknowledgement of the source is made. The Secretariat of the Stockholm Convention and UNEP would appreciate receiving a copy of any publication that uses this publication as a source. No use of this publication may be made for resale or for any other commercial purpose whatsoever without prior permission in writing from the United Nations Environment Programme.

Published by the Secretariat of the Stockholm Convention on Persistent Organic Pollutants in October 2008. For more information please contact:

Secretariat of the Stockholm Convention on Persistent Organic Pollutants
United Nations Environment Programme
International Environment House
11-13 chemin des Anémones
CH-1219, Châtelaine, Geneva, Switzerland
ssc@pops.int - www.pops.int

Designed and printed by: SRO-Kundig - Geneva

GUIDELINES ON BEST AVAILABLE TECHNIQUES AND PROVISIONAL GUIDANCE ON BEST ENVIRONMENTAL PRACTICES

relevant to Article 5 and Annex C of the Stockholm Convention on Persistent Organic Pollutants

May 2007, Geneva, Switzerland

Contents

Section I: Introduction

I.A Purpose
I.B Structure of document and using guidelines and guidance
I.C Chemicals listed in Annex C: Definitions, risks, toxicity
I.D Article 5 and Annex C of the Stockholm Convention
I.E Relationship to the Basel Convention
I.F Relationship to other environmental concerns

Section II: Consideration of alternatives in the application of best available techniques

II.A Consideration of alternatives in the Stockholm Convention
II.B The Stockholm Convention and new sources
II.C An approach to consideration of alternatives
II.D Other considerations of the Stockholm Convention

Section III: Best available techniques and best environmental practices: Guidance, principles and cross-cutting considerations

III.A Guidance
III.B General principles and approaches
III.C Cross-cutting considerations:
(i) Chemicals listed in Annex C: Formation mechanisms
(ii) Waste management considerations
(iii) Co-benefits of best available techniques for chemicals listed in Annex C
(iv) Management of flue gas and other residues
(v) Training of decision makers and technical personnel
(vi) Testing, monitoring and reporting

Section IV: Compilation of summaries from the source categories included in sections V and VI

Summaries of section V: source categories included in Part II of Annex C
Summaries of section VI: source categories included in Part III of Annex C

Section V: Guidance/guidelines by source categories: Source categories in Part II of Annex C

V.A Waste incinerators
(i) Municipal solid waste, hazardous waste and sewage sludge
(ii) Medical waste
V.B Cement kilns firing hazardous waste
V.C Production of pulp using elemental chlorine or chemicals generating elemental chlorine
V.D Thermal processes in the metallurgical industry
(i) Secondary copper production
(ii) Sinter plants in the iron and steel industry
(iii) Secondary aluminium production
(iv) Secondary zinc production

Section VI: Guidance/guidelines by source categories: Source categories in Part III of Annex C

VI.A Open burning of waste, including burning of landfill sites
VI.B Thermal processes in the metallurgical industry not mentioned in Annex C Part II
(i) Secondary lead production
(ii) Primary aluminium production
(iii) Magnesium production
(iv) Secondary steel production
(v) Primary base metals smelting

VI.C	Residential combustion sources
VI.D	Fossil fuel-fired utility and industrial boilers
VI.E	Firing installations for wood and other biomass fuels
VI.F	Specific chemical production processes releasing chemicals listed in Annex C
VI.G	Crematoria
VI.H	Motor vehicles, particularly those burning leaded gasoline
VI.I	Destruction of animal carcasses
VI.J	Textile and leather dyeing (with chloranil) and finishing (with alkaline extraction)
VI.K	Shredder plants for the treatment of end-of-life vehicles
VI.L	Smouldering of copper cables
VI.M	Waste oil refineries

Section VI.I

Guidance/guidelines by source category: Source categories in Part III of Annex C

Part III Source category (i): Destruction of animal carcasses

Contents

VI.I Destruction of animal carcasses 9

1. Process description 9

2. Sources of chemicals listed in Annex C of the Stockholm Convention 11

   2.1 Emissions of persistent organic pollutants from destruction of animal carcasses 11

   2.2 General information on emissions from destruction of carcasses 11

3. Recommended processes 13

   3.1 Overview of disposal options 13

   3.2 Best available techniques 14

   3.3 Best environmental practices 14

4. Primary and secondary measures 16

   4.1 Primary measures 16

   4.2 Secondary measures 18

5. Summary of measures 19

6. Performance level associated with best available techniques and best environmental practices 22

References 22

Tables

Table 1. UK 2001 foot-and-mouth disease outbreak: Carcass disposal 12

Table 2. Measures for recommended processes for new animal carcass incinerators 19

Table 3. Summary of primary and secondary measures for destruction of animal carcasses 20

Illustrations

Figure 1. Schematic of traditional continuous rendering process for carcass destruction 10

Summary

The formation and emission of PCDD, PCDF, PCB and HCB from animal carcass incinerators is due to the presence of these chlorinated materials, precursors and chlorine in the carcasses or in some plastics that can be co-incinerated with animal carcasses and by-products. Measures that can be taken to decrease the formation and release of persistent organic pollutants include the avoidance of co-incineration with other wastes, the requirement for a minimum furnace temperature of 850°C, a 2-second residence time for the combustion gases and sufficient excess air to ensure combustion. Larger facilities (>50 kg/h) should be fitted with air pollution control equipment to minimize emissions of sulphur dioxide, hydrogen chloride, carbon monoxide, volatile organic compounds, particulate matter and persistent organic pollutants. PCDD/PCDF performance levels in air emissions associated with best available techniques are <0.1 ng I-TEQ/Nm^3.

Other methods of disposal, such as burial, landfill or composting, are not considered to contribute significantly to emissions of chemicals listed in Annex C, although environmental, public health, nuisance and animal health issues should be considered. Alkaline hydrolysis digestion is a further technique for the destruction of animal carcasses.

1. Process description

Destruction of animal carcasses is generally achieved by incineration, rendering or a combination of these two activities.

Incineration techniques may include pyrolysis, gasification or other forms of heat treatment, and may involve burning of complete carcasses or parts of carcasses. Rendering covers a range of activities for processing of carcasses to recover materials.

Recent legislation in Europe (EC Directive 1774/2002/EC on Animal By-products) limits the use of materials derived from rendering as human or animal foodstuffs to address public and animal health concerns. In recent years the production of animal by-products has increased, as the market definition of what is considered to be desirable meat products has altered (that is, the proportion of an animal that is considered to be by-product is increasing).

Rendering processes include treatment of hides, skins, feathers, organs, bones, trimmings, fluids and fat. In general the rendering process includes the crushing and grinding of by-products followed by heat treatment (Figure 1). Such processes include high-pressure, high-temperature hydrolysis; high-pressure hydrolysis biogas process; and biodiesel production and gasification. Separation of melted fat (tallow) from solid material is achieved by centrifuge or press. The solid fraction is commonly ground to meat and bone meal.

Meat and bone meal has traditionally been used as a feed supplement for animals but has been banned for such use in the European Union, and is now burnt in appropriate waste incineration facilities or buried. One of the current options is the use of meat and bone meal as alternative fuel in cement kilns (see section V.B of the present guidelines).

Tallow is used in a wide range of industries (including the food industry), particularly the oleochemical industry, which refines tallow into a wide range of products. In the European Union, tallow derived from older animals and other specified risk material is treated separately and is not used for food production but rather is treated as a waste. It can, however, be used as a fuel (within the European Union combustion is governed by further specific legislation – the Waste Incineration Directive, EC Directive 2000/76/EC).

Figure 1. Schematic of traditional continuous rendering process for carcass destruction

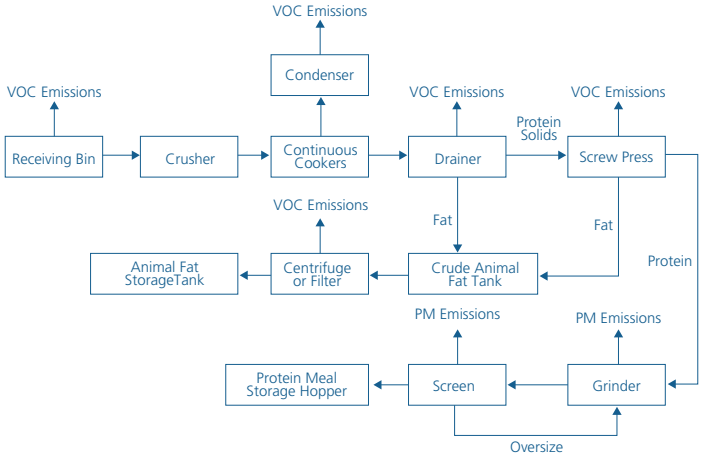

Source: EPA 1995.

Animal carcass incineration is undertaken using a variety of furnace types. Small carcass incinerators may have a simple combustion chamber without any active agitation of the carcass. Larger facilities may employ a rotary kiln to aid agitation and breakdown of the carcass. Similarly, a moving hearth furnace may provide similar agitation. In general, combustion of a complete carcass is difficult. Combustion in furnaces is more controllable if a more even feed process can be employed, using maceration, grinding or other techniques.

2. Sources of chemicals listed in Annex C of the Stockholm Convention

2.1 Emissions of persistent organic pollutants from destruction of animal carcasses

The formation and emission of polychlorinated dibenzo-*p*-dioxins (PCDD), polychlorinated dibenzofurans (PCDF), polychlorinated biphenyls (PCB) and hexachlorobenzene (HCB) from animal carcass incinerators is due to the presence of these materials,[1] precursors or chlorine in the carcasses or in some plastics, which can be co-incinerated with carcass material. However, although measurements of PCDD and PCDF emissions from incineration plant have been undertaken, there are few or no consistent data for PCB and HCB emissions. Consequently PCB and HCB emission levels are much more uncertain than those of PCDD and PCDF from such plant.

In general, rendering processes are considered to be unlikely sources of persistent organic pollutants. However, there is potential for concentration of material in the carcass residues and release from downstream activities (e.g. combustion of material).

2.2 General information on emissions from destruction of carcasses

2.2.1 Incineration

Airborne emissions consist of nitrogen oxides (NO_x), carbon monoxide (CO), sulphur dioxide (SO_2), particulate matter, metal compounds, organic compounds and PCDD/PCDF.

Larger incineration plant may have sophisticated air pollution control equipment (e.g. fabric filtration, lime injection and activated carbon injection). Smaller units include incinerators for slaughterhouse by-products and for veterinary devices, incinerators on farms for disposal of fallen stock and pet crematoria. These can have pollution control measures ranging from minimal (i.e., a combustion chamber and stack) to reasonably sophisticated systems with secondary combustion chambers, afterburners and filtration.

Other emission routes include ash and air pollution control residues, primarily to land. Significant releases to water are considered unlikely.

2.2.2 Open burning

Open burning of animal carcasses is not uncommon. However, burning of more than a handful of carcasses at any one time is uncommon. The Government of the United Kingdom employed mass burning in 2001 as part of the measures to control an outbreak of foot-and-mouth disease but is unlikely to consider such measures appropriate in the future (Table 1).

Table 1. UK 2001 foot-and-mouth disease outbreak: Carcass disposal

Disposal method	Provisional statistics
Burning (on farm)	>950 sites
Burial (on farm)	900 sites
Mass burial	61,000 tons at 4 sites
Commercial landfill	95,000 tons at 29 sites
Rendering	131,000 tons at 7 plant

Source: Anderson 2002.

The emission to atmosphere of PCDD/PCDF from the foot-and-mouth disposal pyres in 2001 was estimated to be about 0.7 g, compared to a total United Kingdom emission of 314 g (NAEI website). Care was taken to construct the pyres using railway sleepers which had not been treated with wood preservatives containing pentachlorophenol or lindane which minimized the releases of PCDD/PCDF. Air curtain incinerators offer a level of technology intermediate between pyres and incinerators but tend not to be permanent facilities. Larger units are essentially engineered pits with the air blower to aid combustion and direction equipment to control the flow of the air attached alongside. Such units offer improved combustion over open burning and have applications in small-scale animal disposal for disease control. Ash disposal to land and potential releases to water need to be considered for open or pit burning.

2.2.3 Emissions from rendering

Rendering processes include treatment of hides, skins, feathers, organs, bones, trimmings, fluids and fat. Rendering includes the crushing and grinding of by-products followed by heat treatment. Separation of melted fat (tallow) from solid material is achieved by centrifuge and press. The solid fraction is commonly ground to a meat and bone meal.

Generally, the emissions that arise from combustion processes associated with rendering (e.g. furnaces for generating steam for heat treatment) do not contain persistent organic pollutants, but odorous and volatile organic compound emissions can arise from various rendering activities.

Meat and bone meal that is burnt can give rise to emissions of persistent organic pollutants. In the European Union, meat and bone meal is now burnt in appropriate incineration or co-incineration facilities or buried.

2.2.4 Emissions of PCDD and PCDF to air

For general information about PCDD and PCDF formation mechanisms see section III.C (i) of the present guidelines.

As an example, new animal carcass incinerators in the United Kingdom are generally required to achieve PCDD/PCDF emission concentrations of less than 0.1 ng I-TEQ/m^3 standardized at 11% oxygen, dry and standard pressure and temperature (0°C, 101.3 kPa).[2] New low-capacity incinerators (average throughput <50 kg/h) do not have

emission limits but are required to operate under a type approval scheme. To achieve type approval the regulatory guidance requires the incinerator manufacturer to show that the machines operate at a minimum temperature of 850°C for a residence time of 2 seconds. It is also noted that the requirements are likely to be met by designs that include a secondary combustion chamber with afterburners.

An emissions survey of existing low-capacity incinerators in the United Kingdom was undertaken for the Department for Environment, Food and Rural Affairs (DEFRA) prior to introduction of the new rules and indicated average PCDD/PCDF concentrations of 0.05–0.40 ng I-TEQ/Nm^3 (AEA Technology 2002). Monitoring of releases to air from two commercially available on-farm animal cremation units in Ontario, Canada, indicated average concentrations of PCDD/PCDF ranging approximately from 0.0006 to 0.0044 ng I-TEQ/Sm^3 (Environment Canada 2004).

It should be noted that low-capacity, on-farm incineration is banned in several countries.

2.2.5 Releases to other media

Process, surface and cooling water can be contaminated by body fluids, suspended solids, fats and oils. Carcasses, ash and other by-products are disposed of to land. Waste products disposed of properly to landfill are not anticipated to give rise to large risk of population exposure; the main route for such exposure is considered to be emissions to air.

3. Recommended processes

3.1 Overview of disposal options

Some countries have adopted a policy of no burial of animals and by-products. In some countries high-capacity centralized facilities have been adopted for disposal of carcasses; some countries have banned on-farm incineration of animal carcasses. Other countries have a mix of large facilities, small facilities (for example on-farm incinerators) and landfill. Alkaline hydrolysis digestion is used in several countries and provides a non-incineration method for carcass disposal, as does disposal in limepits. Anaerobic digestion is a further possible non-incineration method for some animal remains. However, the disposal of the residues would need to be carefully managed for disease control purposes. Further information on anaerobic digestion can be found in a recent review carried out by Kansas State University (Erickson et al 2004).

Disposal to landfill will not eliminate persistent organic pollutants that may be present within the carcasses but should remove them from potential human exposure.

The approach adopted by a country has to reflect the specific nature and circumstances of food production, slaughterhouses and rendering activities in the country (including infrastructure, and cultural constraints and practices). For example, large-scale central incineration facilities require a sophisticated transport infrastructure to minimize risk of infection from moving potentially infected material and a pricing structure capable of supporting the facility.

In the destruction of animal carcasses, the main source of emissions of chemicals listed in Annex C is the incineration of animal carcasses and by-products (including by-product arising from rendering processes). Combustion facilities for carcasses and rendering residues should therefore be designed to address the requirement for a minimum furnace temperature of 850°C, a 2-second residence time for the combustion gases and sufficient excess air to ensure combustion. Designs that cannot achieve these criteria should not be used unless demonstrated to be capable of operating without significant emission of persistent organic pollutants.

Larger facilities, such as may be regulated under the Integrated Pollution Prevention and Control Directive in the European Union, or equivalent pollution prevention legislation in other countries, may also have substantial air pollution control requirements to meet emission requirements for other species. These may include (for example) selective non-catalytic reduction for NO_x control, lime injection for acid gas control (SO_2 and HCl), carbon injection for mercury and PCDD/PCDF control, and fabric filtration for particulate matter control.

Smaller incineration units are unlikely to have a significant national or local impact on air quality. In such instances it will be adequate to adopt the furnace temperature and residence time requirements for control of emissions of persistent organic pollutants.

3.2 Best available techniques

Best available techniques are considered to include technology, management and operation parameters, and control of emissions of persistent organic pollutants would comprise the following measures:

- Combustion furnace meeting the minimum temperature, residence time and oxygen requirements and demonstrated to meet those requirements;
- Suitable air pollution control equipment, including temperature management to control residence time in reformation window, carbon injection and fabric filtration or equivalent;
- Design of waste feed system to minimize effect of new charges of waste (feed should be macerated and passed to furnace using a sealed system);
- Combustion chambers and casings should be made as airtight as possible and operate under reduced pressure to minimize release of furnace gases;
- Gas temperatures should be monitored to allow control systems to maintain minimum temperature criteria (through use of support fuel burners) and provide interlocking to stop feed when temperature falls below minimum;
- Flue gas oxygen and carbon monoxide levels should be monitored and linked to the control system to ensure adequate control of air supplies and address any combustion problems;
- Support fuels should not be waste-derived fuels unless demonstrated to emit no more persistent organic pollutants than gas, oil or other clean fuel;

- Designated hard standing areas with appropriate drainage for loading, unloading, container washing to facilitate cleaning and disinfection. Consider need to incinerate wash-down residues for control of pathogens;
- Mechanized loading and handling of waste materials to minimize exposure to operators;
- Small incinerator facilities (where operation of these is permitted) should be located on a concrete slab and be located at least 100 metres from any well, spring or surface watercourse. Similarly, such facilities should be located at least 6 metres from any building or potentially flammable structure;
- Waste storage facilities to be refrigerated, lockable and rodent and bird proof and have odour control;
- Minimize use of plastic bags to contain waste; consider use of skips, which avoid need for contact with animal remains;
- Ash recovery to be in sealed conveyors, covered skips and sealed containers to avoid fugitive dust releases (particularly of air pollution control residues). Ash to be disposed of to suitable landfill;
- Management of incoming waste and record keeping;
- Effective operation control, inspection and preventive maintenance of components whose failure could impact on environment by releasing persistent organic pollutants;
- Operator competencies to be identified and met by suitable training;
- Application of emission limit values and monitoring of emissions to demonstrate compliance;
- Disposal of ash and residues by landfill.

Best available techniques for other pollutants have not been considered and it should be recognized that other factors will also impact on the definition of what constitutes best available techniques for a facility (for example water use, energy use considerations).

3.3 Best environmental practices

If incineration is to be pursued, countries should in the first instance aim to develop facilities for burning carcasses and animal by-products that can meet the minimum furnace temperature, residence time and oxygen criteria. It should be noted that air pollution control equipment may be needed to meet local emissions and air quality regulations for pollutants other than persistent organic pollutants.

Where heat recovery or air pollution control equipment is installed, the design of such equipment must address the risk of de novo PCDD/PCDF formation by minimizing the residence time of material in the reformation temperature window. Emissions from such plant should be demonstrated to be free of persistent organic pollutants by measurement on commissioning.

Facilities for co-incineration of waste materials (for example tallow or meat and bone meal in cement kilns) should be assessed to ensure that the minimum furnace temperature, residence time and oxygen criteria can be achieved, and emission monitoring should be used to determine compliance with emission limits. The emissions arising from co-incineration of animal waste should not be more polluting than those arising from operation of the process without waste burning.

For very small incineration facilities (<50 kg/h) emissions of persistent organic pollutants may be controlled by using furnaces demonstrated (perhaps, for example, by a type approval scheme) to be capable of operating according to minimum furnace temperature and residence time criteria. In addition, operation should be smokeless and loading and operation procedures may be interlocked to ensure that material cannot be burnt until the secondary chamber reaches the minimum temperature. In such instances it is unlikely that the expense of emission measurements can be justified.

Use of pyres should not be considered a best environmental practice. If pyres are used, care is needed to avoid fuels such as treated wood or other fuels containing materials that may lead to release of persistent organic pollutants. Limited measurement data (Sinclair Knight Merz 2005) indicate that air curtain incinerators may give rise to emissions per carcass similar to small incinerators, but the total quantities of fuel and carcasses (and hence potential emissions) are far higher than for small incinerators. Their use should not be considered a best environmental practice, except perhaps as part of a targeted disease control strategy.

Use of digestion techniques and appropriately designed and managed landfill is an alternative to incineration.

4. Primary and secondary measures

4.1 Primary measures

Primary measures are regarded as pollution prevention techniques that reduce or eliminate the generation and release of persistent organic pollutants. Possible measures include:

4.1.1 Furnace design

The furnace should provide conditions whereby a minimum temperature of 850°C can be maintained throughout loading, burning and discharge of the carcasses with a gas residence time of 2 seconds and sufficient oxygen to ensure destruction of any residual persistent organic pollutants.

It is likely that a secondary combustion chamber will be required with afterburners or air injection to meet these criteria. Particular care should be taken to ensure adequate sizing of the secondary chamber and the qualifying volume (the volume downstream of the last injection of fuel or combustion air and with a minimum gas temperature of 850°C throughout the volume).

Ideally the furnace should be designed to allow continuous operation (that is, with automatic continuous feed to the furnace and automatic ash removal) as this will minimize process upsets, which can give rise to emission of persistent organic pollutants. Continuous operation requires maceration of solid materials to ensure consistent feed. It is recognized that, for smaller units and units handling whole carcasses, continuous operation may not be appropriate. The design of the furnace needs to facilitate good burnout of the material (low carbon in ash content).

Where co-incineration is proposed, the same furnace temperature and residence time criteria should be adopted.

4.1.2 Feed material

The presence of plastics and other contaminants (particularly chlorine compounds) in the feed material should be avoided to reduce the generation of persistent organic pollutants during incomplete combustion or by de novo synthesis. It is recognized that use of plastic bags and similar material is necessary for operator and animal hygiene. However, their use should be minimized by use of mechanized and automatic feed devices.

It should be recognized that carcasses and by-products may need to be classified according to source (for example, specified risk material).

Methods to be considered include:

- Use of mechanized loaders to avoid contact with carcasses;
- Use of macerating and grinding techniques to allow automatic, continuous loading and operation;
- Minimizing contamination from packaging, including use of non-halogenated plastics.

4.1.3 Fuels

The use of clean fuels is recommended for start-up, support burners and afterburners. Larger facilities should aim for self-sustaining combustion in the furnace to minimize fuel use. Use of waste-derived or other fuels potentially contaminated with persistent organic pollutants should be minimized and must not be used during start-up or process upset when temperatures are below 850°C and unstable conditions may be present.

4.1.4 Effective process control

Process control systems should be utilized to maintain process stability and operate at parameter levels that will contribute to the minimization of generation of persistent organic pollutants, such as maintaining a minimum furnace temperature of 850°C to destroy such pollutants. Ideally, emissions of persistent organic pollutants should be monitored continuously to ensure reduced releases. Variables such as temperature, residence time, and levels of CO, volatile organic compounds and other gas components should be continuously monitored and maintained to establish optimum operating conditions.

4.1.5 Operator competency

The management of the facility is the key to ensuring safe and environmentally benign operation. All personnel operating the facility should be fully conversant with their duties, in particular with regard to routine operation, maintenance, disease control, process upset conditions and local environmental legislation. The competency of operators should be addressed by suitable training at an appropriate level for the facility.

4.2 Secondary measures

Secondary measures are pollution control techniques. These methods do not eliminate the generation of contaminants, but serve as means to contain and prevent emissions.

4.2.1 Fume and gas collection

Air emissions should be controlled at all stages of the process, including material handling, combustion and material transfer points, to control the emission of persistent organic pollutants. Sealed furnaces are essential to contain fugitive emissions while permitting heat recovery and collecting off-gases for abatement or discharge. Proper design of hooding and ductwork is essential to minimize fugitive discharge. Sealed skips or enclosed feed systems may be used and can significantly reduce fugitive emissions to air by containing emissions during charging.

4.2.2 Air pollution control equipment

Large facilities should employ a range of air pollution control equipment to provide control for all significant emissions to atmosphere. Care in selection, design and use of air pollution control equipment for other pollutants will also, in general, reduce emissions of persistent organic pollutants. The design has to recognize the potential for de novo formation of selected persistent organic pollutants and minimize the potential for such formation. Particulate matter should be removed to reduce PCDD/PCDF emissions to atmosphere (although they will be discharged to landfill). Fabric filters are an effective technique but are essentially low-temperature devices (up to 200°C).

For small facility processes the use of afterburners is probably sufficient abatement to control emission of persistent organic pollutants, and particulate abatement is considered unnecessary.

Air pollution control operations should be constantly monitored by devices to detect failure. Other more recent developments include online cleaning methods and use of catalytic coatings to destroy PCDD/PCDF.

Activated carbon treatment should be considered for removal of persistent organic pollutants from off-gases. Activated carbon possesses a large surface area on which PCDD/PCDF can be adsorbed. Off-gases can be treated with activated carbon using fixed or moving bed reactors, or by injection of carbon particulate into the gas stream followed by removal as a filter dust using high-efficiency dust removal systems such as fabric filters.

5. Summary of measures

Tables 2 and 3 present a summary of the measures discussed in previous sections.

Table 2. Measures for recommended processes for new animal carcass incinerators

Measure	Description	Considerations	Other comments
Recommended processes	Large (>50 kg/h) incinerators and co-incinerators	Minimum 850°C, 2-second residence time in qualifying volume with sufficient air to ensure destruction of persistent organic pollutants. Fit with air pollution control equipment to minimize emissions of SO_2, HCl, CO, volatile organic compounds, particulate matter and persistent organic pollutants	These are considered to be best available techniques. Should also have management systems in place, demonstration that facility meets emission limit values and regular monitoring to ensure compliance
	Small (<50 kg/h) incinerators	Minimum 850°C, 2-second residence time in qualifying volume with sufficient air to ensure destruction of persistent organic pollutants	For smaller plant these conditions should be minimum to address issue of persistent organic pollutants. Could be adopted using a type approval mechanism and inspection of management of facility (rather than expensive emission tests)

Table 3. Summary of primary and secondary measures for destruction of animal carcasses

Measure	Description	Considerations	Other comments
Primary measures			
Furnace design			Best place to maximize destruction of persistent organic pollutants and minimize their formation
Control of feed material	The presence of plastics and chlorine compounds in the feed material should be minimized to a level consistent with good hygiene to reduce the generation of persistent organic pollutants during incomplete combustion or by de novo synthesis	Elimination of plastic, maximize use of mechanical handling	Fairly low-tech
Fuel	Clean fuels for support		
Effective process control	Process control systems should be utilized to maintain process stability and operate at parameter levels that will contribute to the minimization of emission of persistent organic pollutants	PCDD/PCDF emissions may be minimized by controlling other variables such as temperature, residence time, gaseous components	Use of temperature is a fairly basic control parameter. Monitoring of oxygen, CO and volatile organic compounds is more complex but straightforward. However, main issue is maintenance of a control system able to use data in real time to address combustion air supply dampers, support burners and other control features

Measure	Description	Considerations	Other comments
Secondary measures			
Fume and gas collection	Effective containment of furnace gases in all conditions of the incineration process to avoid fugitive releases	Processes to be considered include sealed furnaces to contain fugitive emissions while permitting heat recovery and collecting off-gases	
Air pollution control equipment	Particulate matter abatement will help reduce potential emission of persistent organic pollutants. Activated carbon treatment should be considered as this material possesses large surface area on which PCDD/PCDF can be adsorbed from off-gases	Fabric filtration is the most effective particulate matter abatement and is consistent with use of dry/semi-dry sorbents for acid gas and metals control. However, it will require a temperature reduction. Injection of powdered activated carbon into the gas stream followed by removal as a filter dust	Use of air pollution control devices gives rise to additional waste streams and requires consumables. Likely need to reduce flue gas temperature (to avoid use of more exotic filtration media), consequently care needed to minimize residence in reformation window. Better to avoid formation of persistent organic pollutants in the furnace. However, this approach allows some back-up for process upset conditions and is considered a best available technique in Europe for incineration processes. Most air pollution control equipment is expensive to buy and run, and spares are expensive

6. Performance level associated with best available techniques and best environmental practices

PCDD/PCDF performance levels in air emissions associated with best available techniques are <0.1 ng I-TEQ/Nm^3 at 11% oxygen, dry and standard temperature and pressure (0°C 101.3 kPa). For further information see European Commission 2003.

References

AEA Technology. 2002. *Atmospheric Emissions from Small Carcass Incinerators*. Report for the Department for Environment, Food and Rural Affairs, United Kingdom.

Anderson I. 2002. *Foot and Mouth Disease 2001: Lessons to be Learnt Inquiry Report*. Stationery Office, London.

Environment Canada. 2004. *Characterization of emissions from an animal crematorium Burn easy Model 37-1 and EcoWaste CleanAire*. ERMD 2003-04 Unpublished reports. March 2004

EPA (United States Environmental Protection Agency). 1995. *Meat Rendering Plants*. Emission Factor Documentation for Background Report AP-42, Section 9.5.3. EPA, Office of Air Quality Planning and Standards, Emission Factor and Inventory Group, Washington, D.C.

Erickson L. Fayet E. Kakumau B. Davis (2004) Carcass Disposal: A Comprehensive Review, National Agricultural Biosecurity Centre, Kansas State University, Chapter Seven - Anaerobic digestion.

European Commission. 2003. *Reference Document on Best Available Techniques in the Slaughterhouses and Animal By-products Industries*. BAT Reference Document (BREF). European IPPC Bureau, Seville, Spain. Eippcb.jrc.es.

NAEI (National Atmospheric Emissions Inventory). *Emission Factors Database*. DEFRA (Department for Environment, Food and Rural Affairs). www.naei.org.uk/emissions/index.php.

Sinclair Knight Merz. 2005. *Air Curtain Incinerator Trial Report.* Report for New Zealand Ministry of Agriculture and Forestry.

Notes

[1] Persistent organic pollutants deposited on grazing areas and those present in prepared animal feeds can be ingested and may be accumulated by animals during their lifetime.

[2] 1 ng (nanogram) = 1×10^{-12} kilogram (1×10^{-9} gram). For information on toxicity measurement see section I.C, subsection 3 of the present guidelines.

http://www.pops.int

UNEP/SSC/BATBEP/2008/14